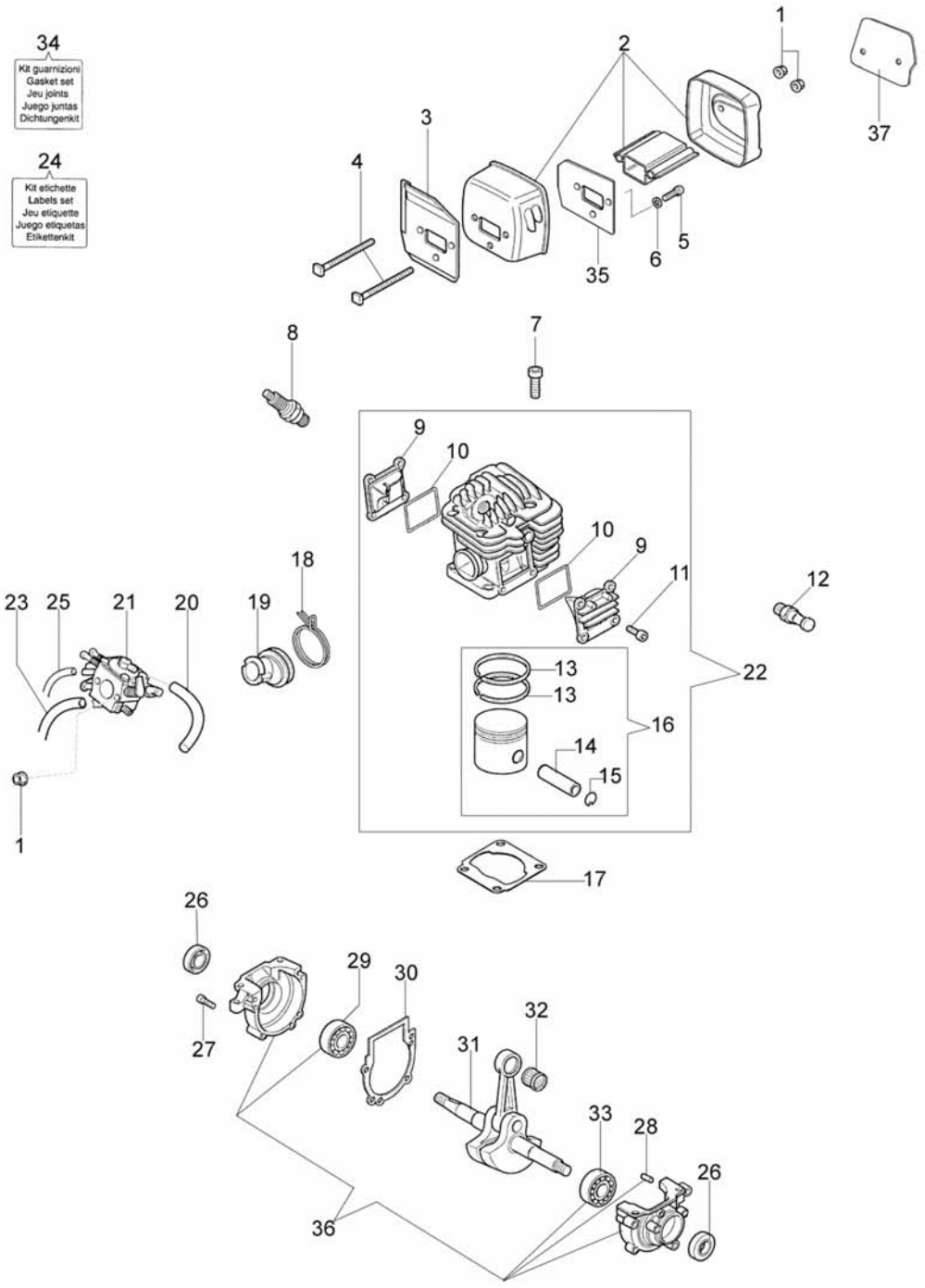
34
Kit guarnizioni
Gasket set
Jeu joints
Juego juntas
Dichtungenkit
24
Kit etichette
Labels set
Jeu etiquette
Juego etiquetas
Etikettenkit
1
2
3
4
5
6
7
8
9
10
11
12
13
14
15
16
17
18
19
20
21
22
23
25
26
27
28
29
30
31
32
33
35
36
37

Ref.Nu	Qty	Part number	Description	Validity from	Validity till	Notes	Bulletin
1	3	3933100R	Nut				
2	1	50072033	Muffler				
3	1	50070031	Gasket				
4	2	50070032	Screw				
5	2	3960073	Screw				
6	2	3918010R	Washer				
7	4	3860095R	Screw				
8	1	3055114	Spark plug				
9	2	50070071	Cover				
10	2	50070186	Gasket				
11	8	3960074	Screw				
12	1	50070207	Decompressor				
13	2	50070128R	Piston ring Ø42				
14	1	50070117R	Piston pin				
15	1	004900061R	Ring				
16	1	50072032A	Piston assy Ø42				
17	1	50070047A	Gasket				
18	1	097000059A	Spring				
19	1	50070010AR	Manifold				
20	1	50070152	Tube				
21		50070224	Carb.HDA-205D				
21	1	2318935CR	Carburetor C3-E9				
22	1	50072024A	Compl. cyl. Ø42				
23	1	50070151	Tube				
24	1	50072053	Labels kit				
25	1	026400089A	Tube				
26	2	007201313R	Seal ring				
27	4	3860096	Screw				
28	2	094600042	Pin				
29	1	3035015R	Bearing				
30	1	50070039AR	Gasket				
31	1	50070001R	Crankshaft				
32	1	094000005	Bearing				
33	1	3034012R	Bearing				
34	1	50072028	Gasket set				
35	1	50070175	Plate				
36	1	50072051	Crankcase assy				
37	1	50070059R	Guard				

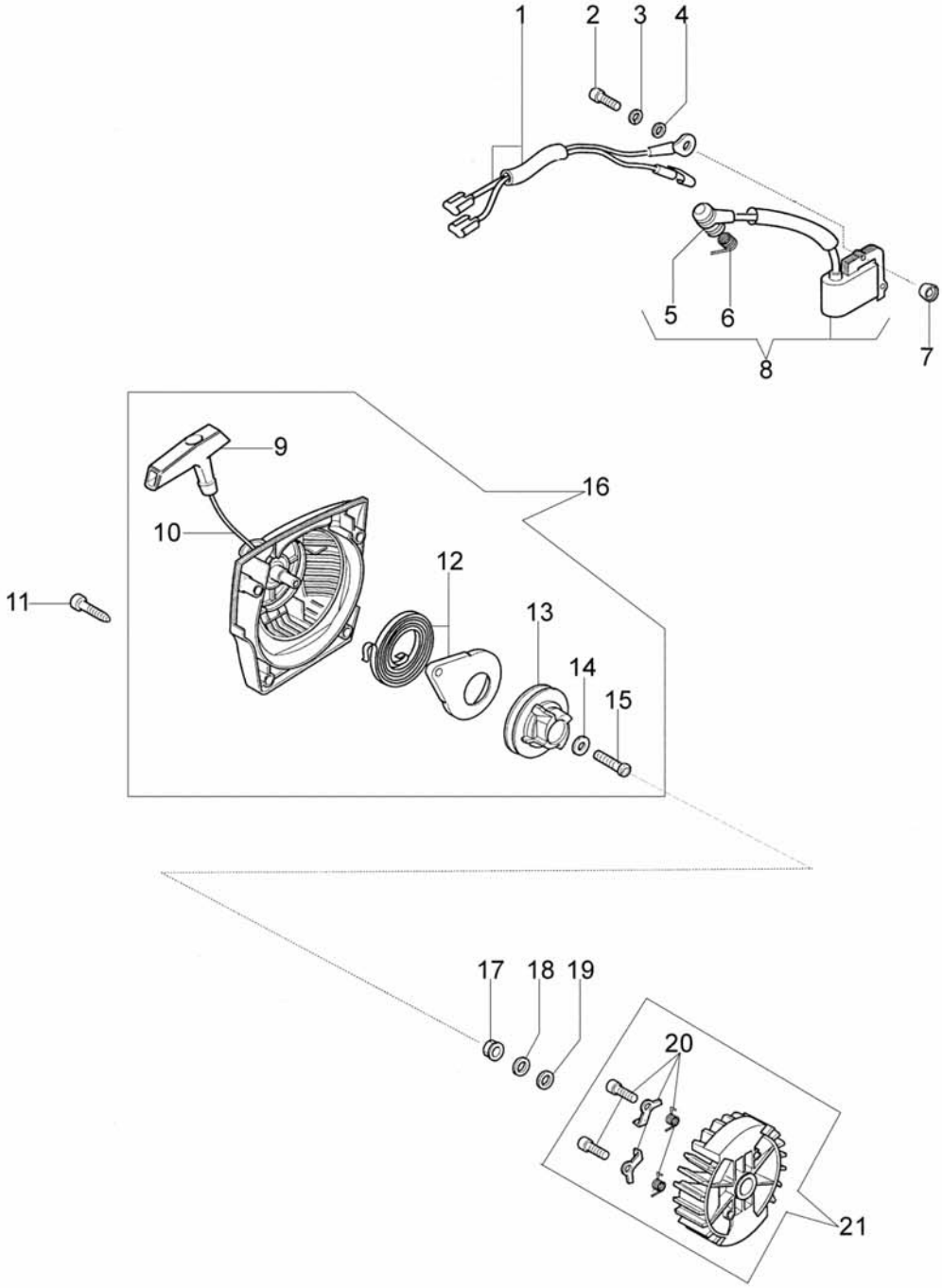
1
2
3
4
5
6
7
8
9
10
11
12
13
14
15
16
17
18
19
20
21

147 - Starter assy

Ref.Nu	Qty	Part number	Description	Validity from	Validity till	Notes	Bulletin
1	1	50070077	Cable				
2	1	094000227	Screw				
3	1	006000315	Washer				
4	1	3916004	Washer				
5	1	094600097A	Spark plug cap				
6	1	094600169A	Spring				
7	2	50070148	Spacer				
8	1	50070013AR	Ignition coil				
9	1	097000064A	Handle				
10	1	50070123R	Starter rope				
11	4	3960092AR	Screw				
12	1	50050073R	Spring				
13	1	50070050A	Starter pulley				
14	1	094500034R	Washer				
15	1	094600041AR	Screw				
16	1	50072011R	Starter assy				
17	2	004000142	Nut				
18	2	3833080	Washer				
19	2	005000361	Washer				
20	1	50072029	Pawl				
21	1	50070198R	Flywheel				

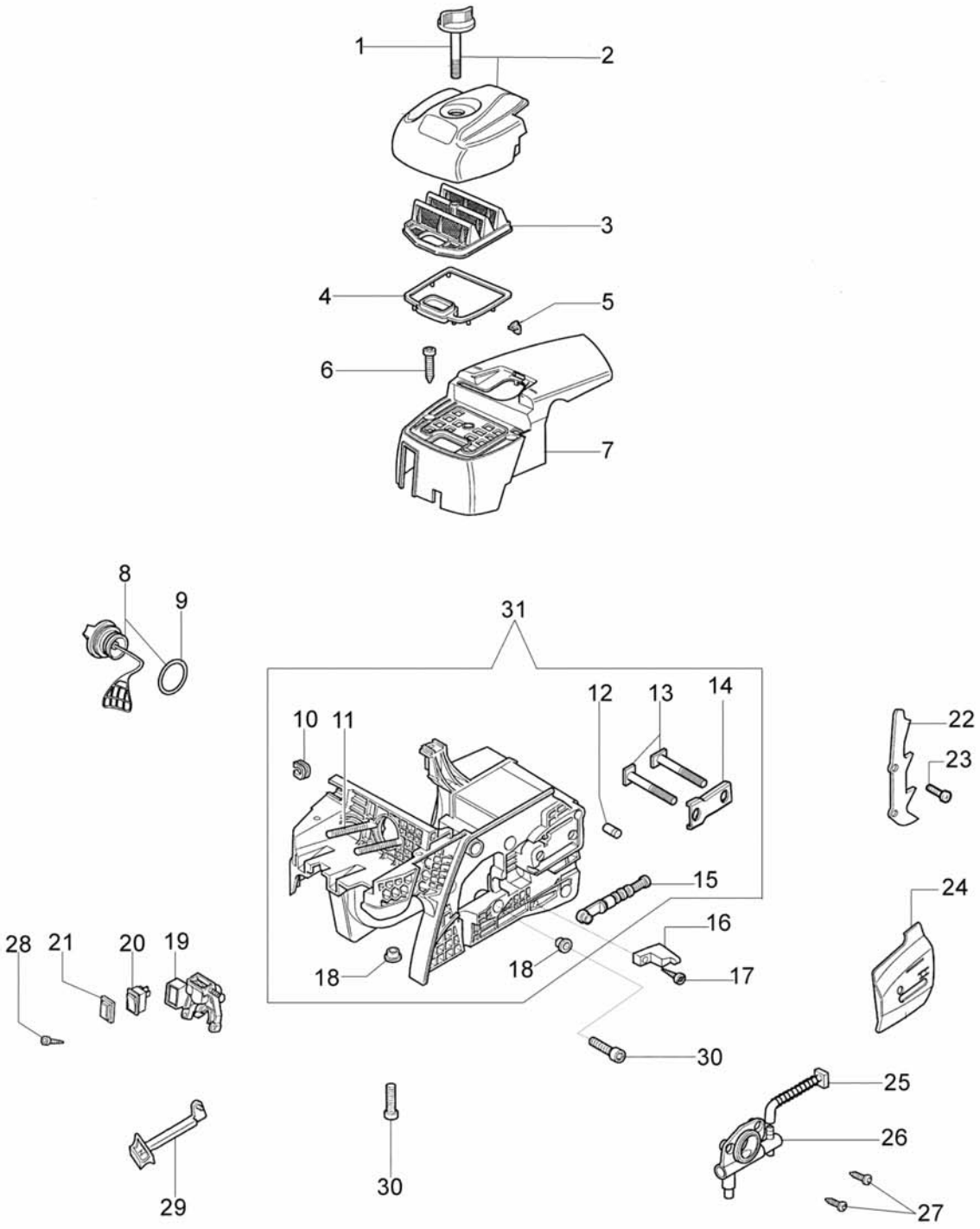
1
2
3
4
5
6
7
8
9
31
10
11
12
13
14
22
23
15
24
16
28
21
20
19
18
18
17
30
25
26
29
30
27

Ref.Nu	Qty	Part number	Description	Validity from	Validity till	Notes	Bulletin
1	1	50070034	Knob				
2	1	50072031	Cover				
3	1	50070036R	Air filter std				BT1-017-07/07
3	1	50070244R	Air filter optional				BT1-017-07/07
4	1	50070056	Gasket				
5	1	50070066	Deflector				
6	3	3960092AR	Screw				
7	1	50070193	Cover				
8	1	50052005R	Cpl. cap				
9	1	3049025	O-ring				
10	1	005000347A	Grommet				
11	1	50070067A	Rod				
12	1	097000229R	Breather valve				
13	1	50070052AR	Screw				
14	1	50070211	Plate				
15	1	50072010A	Oil filter				
16	1	094600369R	Guard				
17	1	094600041AR	Screw				
18	5	50050067	Spacer				
19	1	50070035A	Support				
20	1	2317021R	Switch				
21	1	2317013	Guard				
22	1	50070062	Spike				
23	2	3960098	Screw				
24	1	50070055	Plate				
25	1	50070054	Tube				
26	1	50170051AR	Oil pump				BT4-087-10/07
27	2	3960074	Screw				
28	2	3960057R	Screw				
29	1	50070228	Lever				
30	5	3860097	Screw				
31	1	50070114BR	Crankcase				

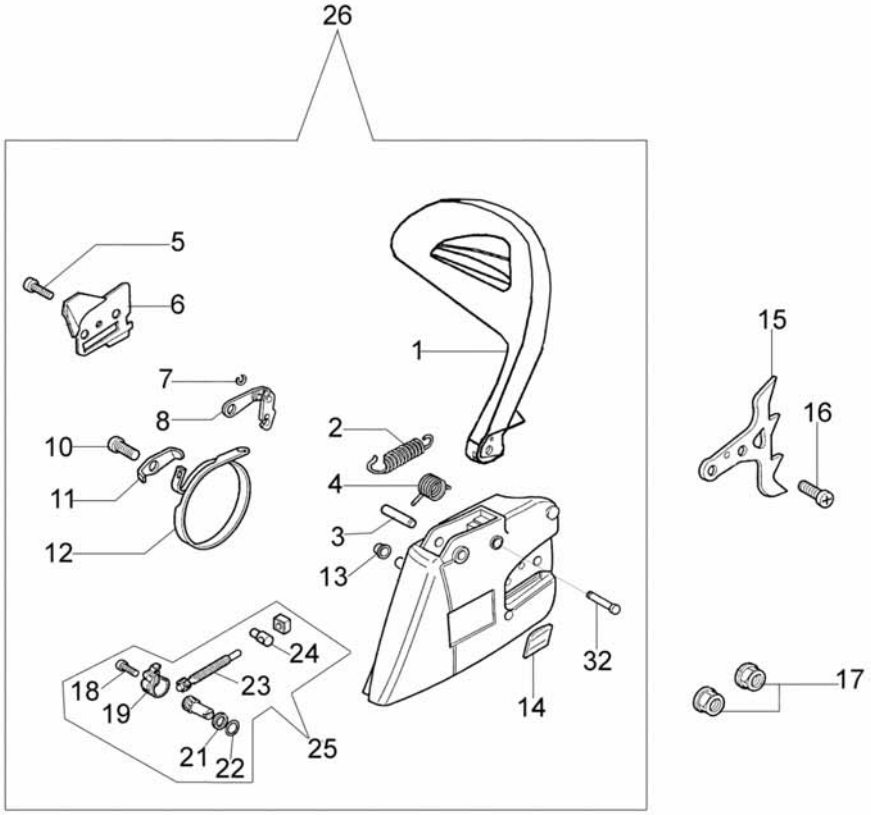
26
5
6
1
15
7
8
16
2
10
4
11
3
12
13
24
32
18
23
17
19
14
21
22
25

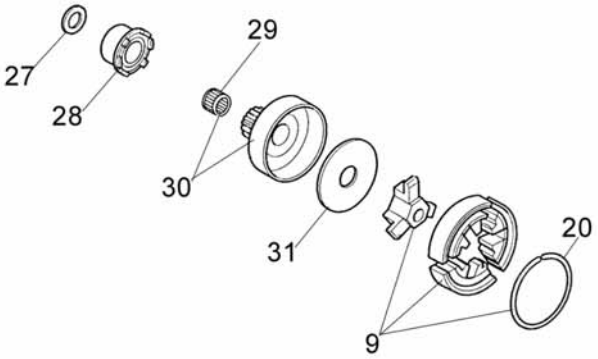
29
27
28
30
31
20
9

147 - Clutch assy

Ref.Nu	Qty	Part number	Description	Validity from	Validity till	Notes	Bulletin
1	1	50070095	Guard				
2	1	095000219R	Spring				
3	1	50010243	Pin				
4	1	50010088AR	Spring				
5	1	3960045	Screw				
6	1	50070124A	Plate				
7	1	3026003	Ring				
8	1	097000146	Lever				
9	1	094500297R	Clutch				
10	1	3960073	Screw				
11	1	50050125R	Plate				
12	1	50050039	Brake band				
13	1	006000300	Bushing				
14	1	50070149	Guard				
15	1	50070033	Spike				
16	2	3960098	Screw				
17	1	50010148R	Nut				
18	1	3960093	Screw				
19	1	50070081	Cover				
20	1	094500029	Spring				
21	1	50070088	Washer				
22	1	3049007	O-ring				
23	1	50070080	Chain tensioner				
24	1	50070087AR	Bolt				
25	1	50072027A	Chain tensioner				
26	1	50072015	Chain cover assy				
27	1	50070069	Washer				
28	1	50070025	Worm gear				
29	1	005000165	Bearing				
30	1	094500761A	Clutch drum .325"				
31	1	375100012A	Washer				
32	1	097000106	Pin				

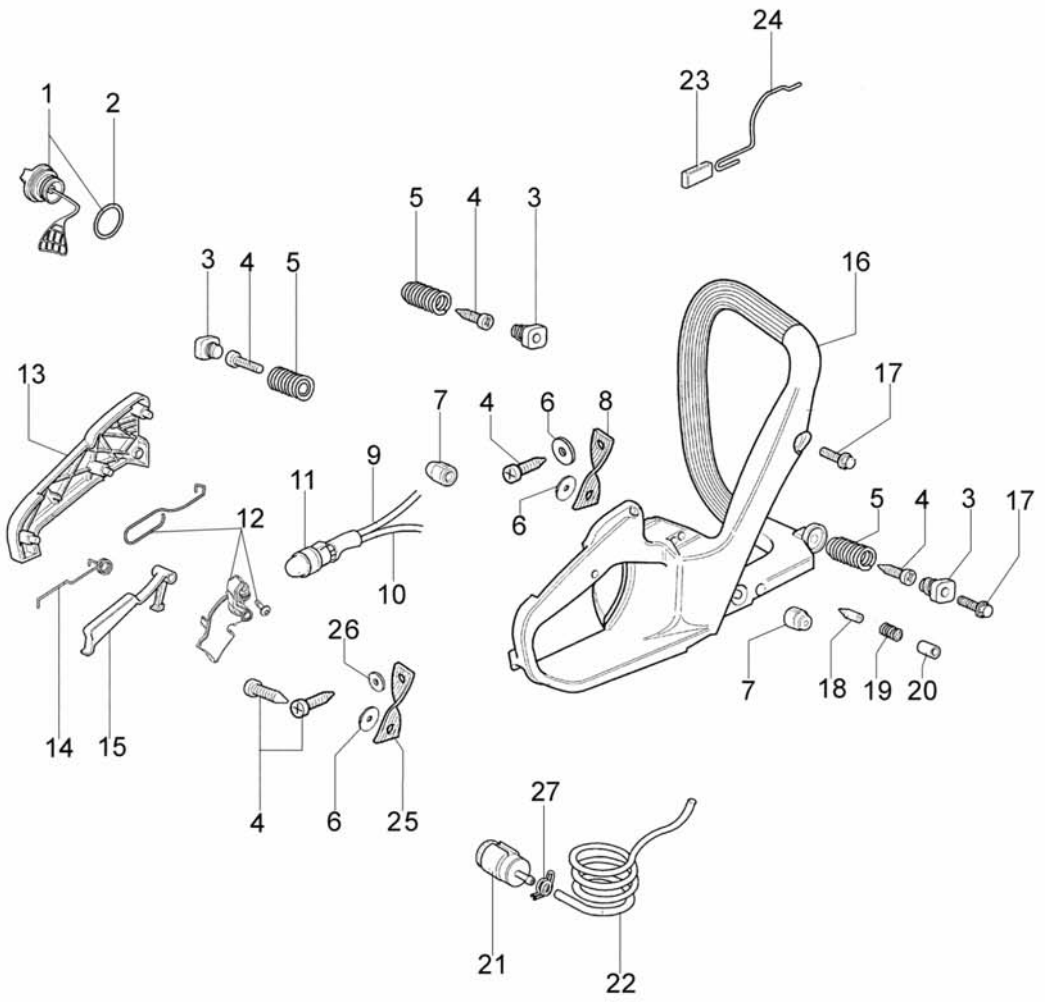
24
23
1
2
5
4
3
3
4
5
16
13
17
7
4
6
8
9
11
5
4
3
17
12
6
10
26
7
18
19
20
14
15
4
6
25
27
21
22

147 - Handle

Ref.Nu	Qty	Part number	Description	Validity from	Validity till	Notes	Bulletin
1	1	50072009	Tank cap				
2	1	099900090	O-ring				
3	3	50070049	Support				
4	3	3960073	Screw				
5	3	50070024	Spring				
6	3	3057005	Washer				
7	2	50010061R	AV-mount				
8	1	50070182	Safety tape				
9	1	50060039	Tube				
10	1	61110034	Tube				
11	1	50060012	Air purge				
12	1	50070260	Throttle assy				BT4-103-05/10
13	1	50050214	Cover				
14	1	097000028R	Spring				
15	1	50050096AR	Lever				
16	1	50070065BR	Fuel tank assy				
17	3	3960099R	Screw				
18	1	094500577A	Valve				
19	1	094500575R	Spring				
20	1	50050071	Breather valve				
21	1	50010218R	Fuel filter				
22	1	50070064	Fuel line				
23	1	50070197A	Knob				BT4-103-05/10
24	1	50070044	Throttle				BT4-103-05/10
25	1	50070181	Safety tape				
26	1	3916005	Washer				
27	1	4098377	Band				

Zama C3-E9

compl. p.n. 2318935CR

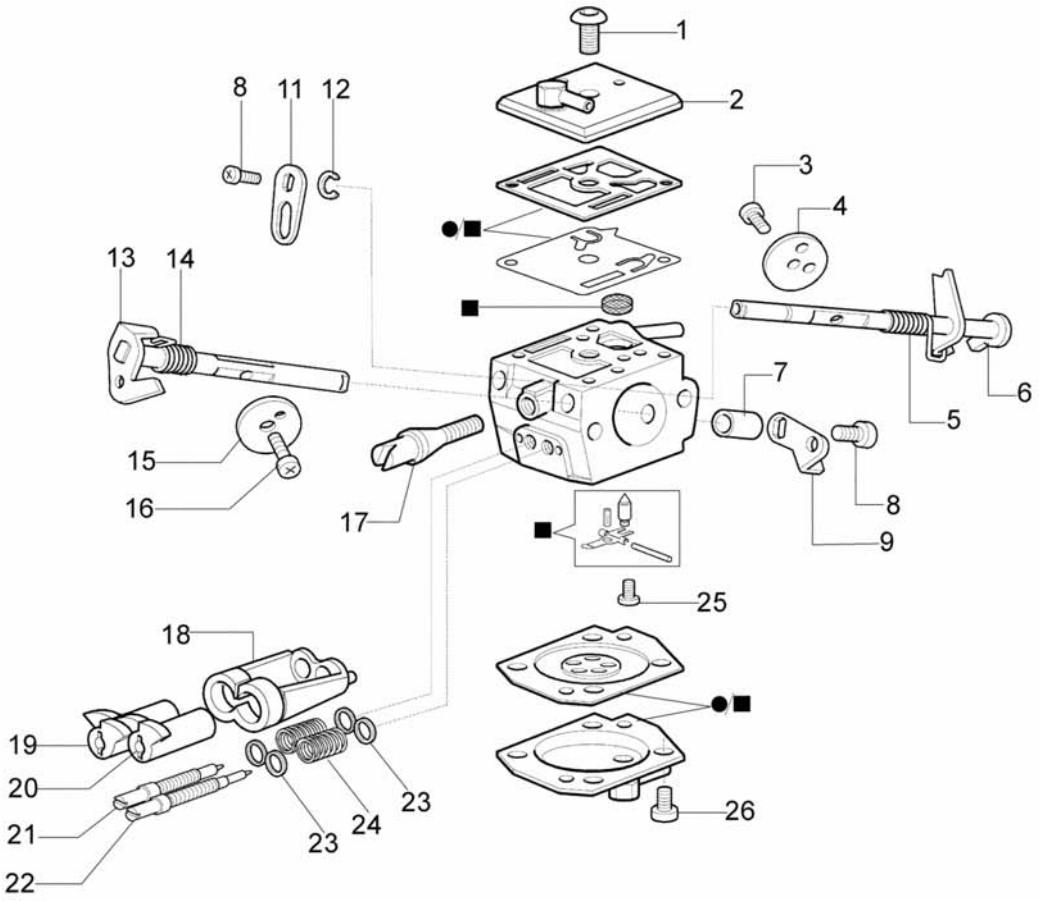

27 ● **Kit membrane e Guarnizioni**
Diapragm and Gasket set

10 ■ **Kit riparazioni**
Repair kit

147 - Carburetor Zama C3-E9

Ref.Nu	Qty	Part number	Description	Validity from	Validity till	Notes	Bulletin
1	1	093500574	Screw				
2	1	2318939	Gasket				
3	1	2318388	Screw				
4	1	2318913	Starter lever				
5	1	2318924	Spring				
6	1	2318907	Lever				
7	1	093500560	Clamp				
8	2	004900196	Screw				
9	1	2318918	Lever				
10	1	2318869	Repair kit				
11	1	2318909	Lever				
12	1	2318535	Ring				
13	1	2318932	Spring				
14	1	2318936	Shaft				
15	1	2318917	Starter valve				
16	1	2318916	Screw				
17	1	2318908	Screw				
18	1	2318904	Guard				
19	1	2318903	Cap				
20	1	2318889	Cap				
21	1	2318912	Screw				
22	1	2318911	Screw				
23	1	2318888	Washer				
24	1	2318532	Spring				
25	1	2318928	Screw				
26	4	2318522	Screw				
27	1	2318868	Diaphragm and gasket set				

mod. Walbro HDA-205D

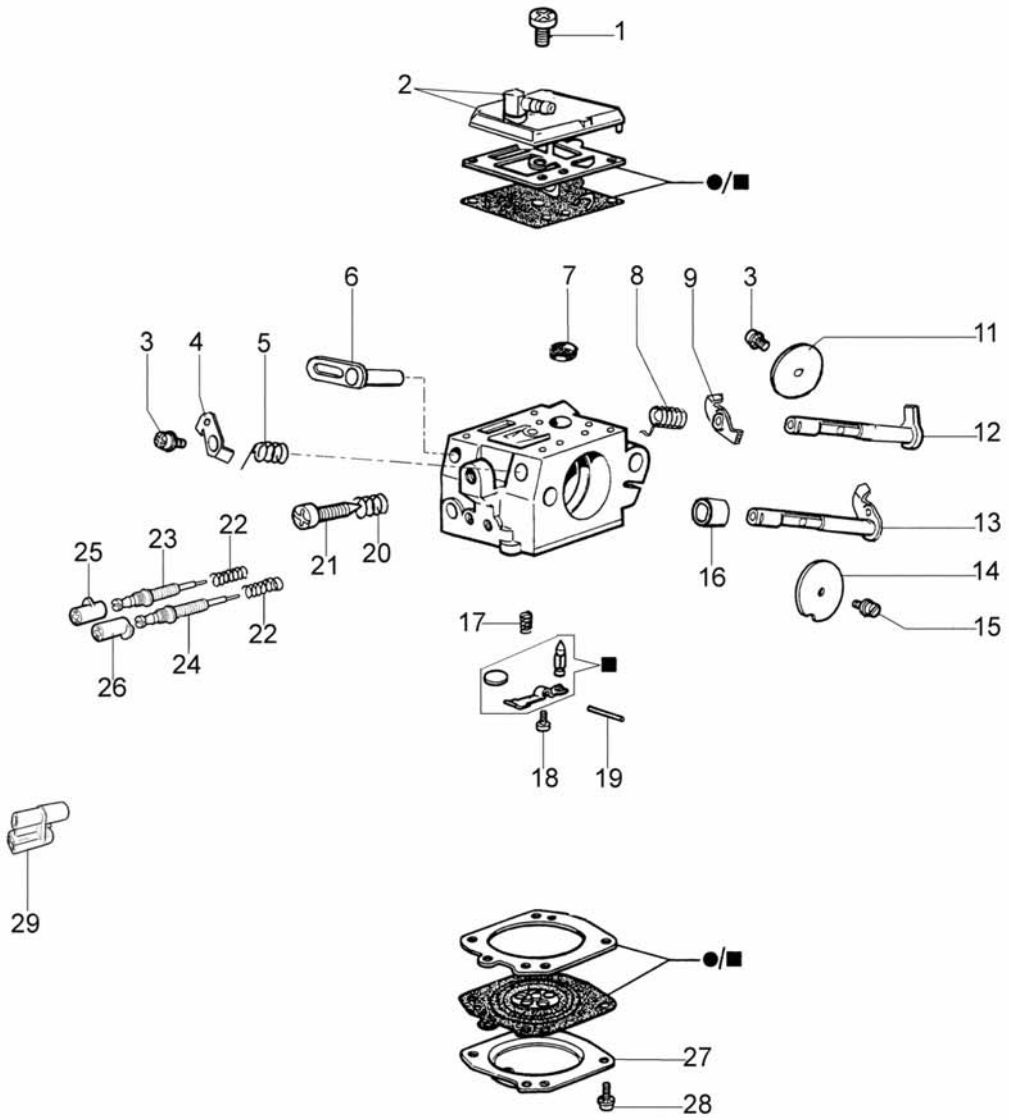

●30 KIT MENBRANE & GUARNIZIONI
DIAPHRAGM & GASKET SET

■10 KIT RIPARAZIONE
REPAIR KIT

147 - Carburetor Walbro HDA-205D

Ref.Nu	Qty	Part number	Description	Validity from	Validity till	Notes	Bulletin
1	1	50010109	Screw				
2	1	50070154	Cover				
3	2	50010141	Screw				
4	1	50070160	Throttle lever				
5	1	50070165	Spring				
6	1	50070158	Starter lever				
7	1	003300204	Fuel filter				
8	1	50070166	Spring				
9	1	50070171	Lever				
10	1	50010123A	Repair kit				
11	1	2318809	Starter lever				
12	1	50070232	Shaft				
13	1	50070155	Shaft				
14	1	50070156	Shutter				
15	1	2318833	Screw				
16	1	50070169	Bushing				
17	1	50070164	Spring				
18	1	003300202	Screw				
19	1	003300201	Spindle				
20	1	094600148	Spring				
21	1	50070163	Screw				
22	2	095000147	Spring				
23	1	50070234	Screw				
24	1	50070233	Screw				
25	1	2318694	Cap				
26	1	50070167	Screw L				
27	1	50070153	Cover				
28	4	035000162	Screw				
29	1	50070186	Gasket				
30	1	50010122A	Diaphragm and gasket set				